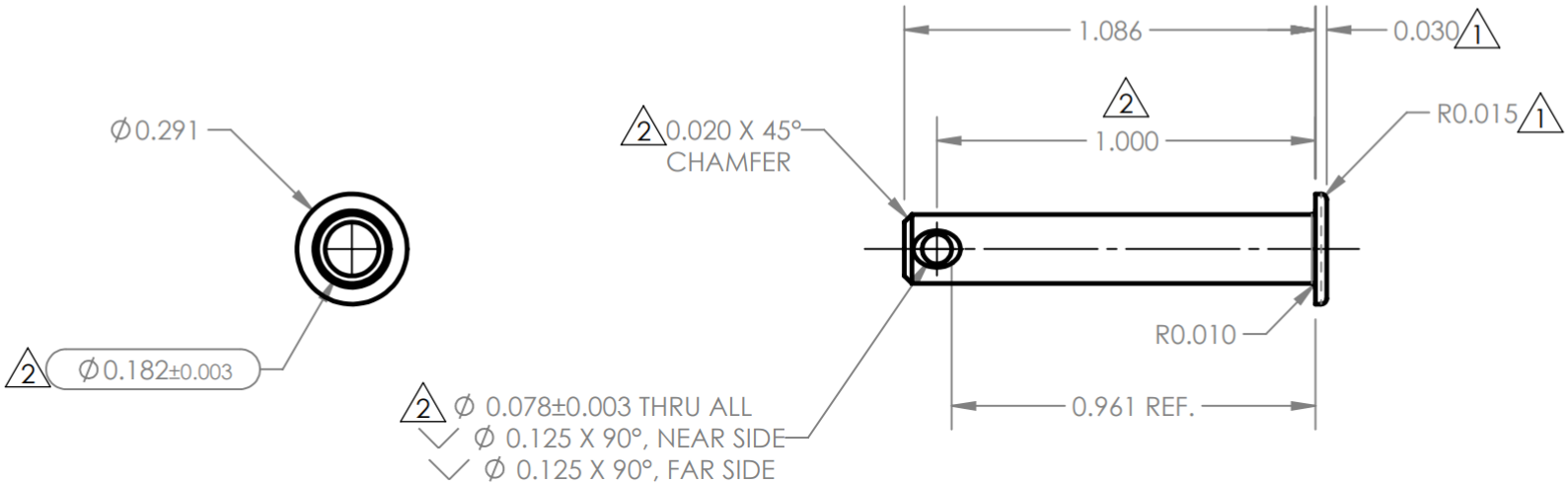

ACTUAL SIZE

REV.	DATE	REVISION DESCRIPTION	BY	ENG APR	MFG APR	ECN #
2	10/8/2021	UPDATED SHEET FORMAT, FINISH WAS BLANK, ADDED KPC, Ø0.078 WAS Ø0.082, CHAMFER WAS .010, 1.000 WAS 1.010	MDS	CJL	MKE	9728
1	10/30/2014	0.030 WAS 0.055 & R0.015 WAS R0.025	PVH	MDL	BP	5330

DIMENSIONS IN OVALS ARE KEY PRODUCT CHARACTERISTICS

UNLESS OTHERWISE SPECIFIED:
- DIMENSIONS IN INCHES
- ALL DIMENSIONS PRIOR TO FINISHING
- REMOVE ALL BURRS AND BREAK SHARP EDGES WITH 0.010 MAX RADIUS OR CHAMFER

TOLERANCES UNLESS OTHERWISE SPECIFIED:

DECIMAL: ± .005

ANGULAR: ± 1 °

SURFACE FINISH: 63 ✓

CLEVIS PIN
3/16 X 31/32 GRIP LENGTH

MATERIAL: 316 SS

FINISH: PASSIVATE 2

© The designs, constructions, arrangements, disclosures and devices illustrated in presentations bearing this note are the property of Pewaukee, WI and are submitted in confidence with the understanding that such material shall not be utilized in any way by any party without prior written consent from

DRAWING NUMBER: H-68135

REV.: 2

PART # SP-104

SHEET NUMBER: 1/1

SCALE: 2:1

DESIGN BY :	PVH	DATE:	8/12/2014
DRAWN BY :	PVH	DATE:	8/12/2014
ENG. APR :	MDL	DATE:	8/12/2014
MFG. APR :	MKE	DATE:	10/11/2021